Layer	Name	Material	Thickness	Constant
	Top Overlay			
	Top Solder	SM-001	1,00mil	4
	Top Surface Finish	PbSn	0,79mil	
1	Top Layer	CF-004	1,38mil	
	Dielectric 1	Core-043	59,00mil	4.3
2	Bottom Layer	CF-004	1,38mil	
	Bottom Surface Finish	PbSn	0,79mil	
	Bottom Solder	SM-001	1,00mil	4
	Bottom Overlay			

Total board thickness: 65,33mil

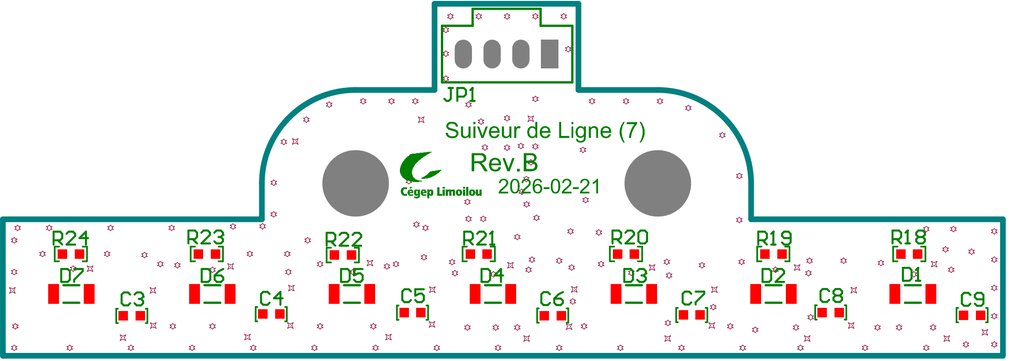

Symbol	Count	Hole Size	Plated	Hole Type	Drill Layer Pair	Via/Pad	Pad Shape
✡	137	0.300mm (11.81mil)	PTH	Round	Top Layer - Bottom Layer	Via	Rounded
✖	31	0.500mm (19.69mil)	PTH	Round	Top Layer - Bottom Layer	Via	Rounded
▽	4	1.100mm (43.31mil)	PTH	Round	Top Layer - Bottom Layer	Pad	(Mixed)
□	2	3.200mm (125.98mil)	PTH	Round	Top Layer - Bottom Layer	Pad	Rounded
	174 Total						

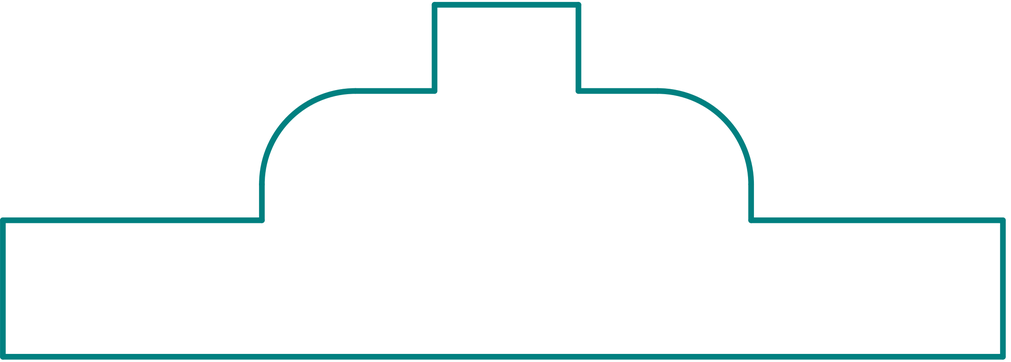

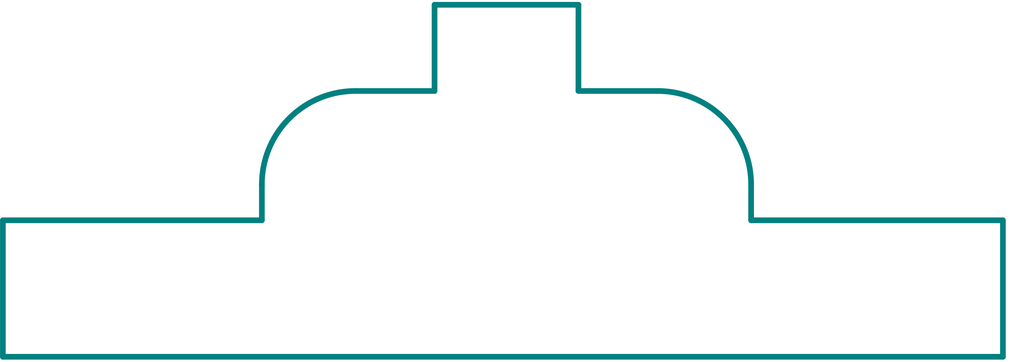

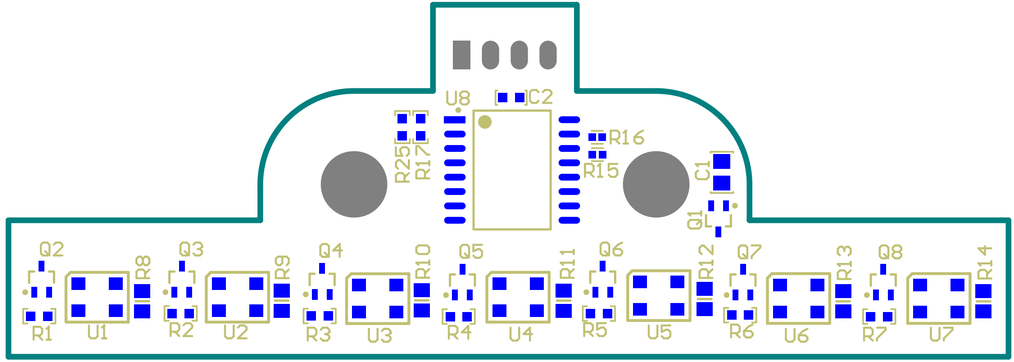
U8
C2
R25
R17
R16
R15
C1
Q1
Q2
R8
Q3
R9
Q4
R10
Q5
R11
Q6
R12
Q7
R13
Q8
R14
R1
U1
R2
U2
R3
U3
R4
U4
R5
U5
R6
U6
R7
U7